QTM-DRIVE
INSTALLATION INSTRUCTIONS

Must be installed by licensed electrician.

- Installation must be in accordance with DMX512-A standard
- DMX Shield must be grounded to Earth Ground external to Power Supply

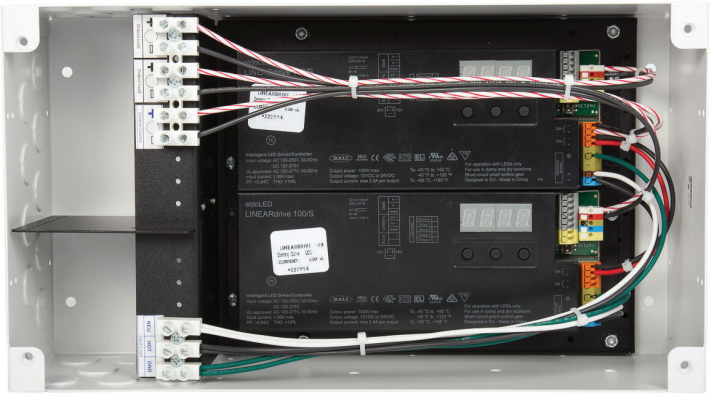

QTM-DRIVE

⚠ WARNING

Risk of Fire / Electric Shock

Transformer should be installed by a Licensed electrician in accordance with the N.E.C. and all local codes in force.

- Wear rubber shoes and work on a sturdy wooden or fiberglass ladder.
- This power supply must be installed according to the National Electric Code and local codes and ordinances.
- This power supply is to be installed and serviced only by an licensed electricians.
- This power supply is to be installed so that it is not likely to be contacted by people.
- To avoid a hazard to children, account for all parts and destroy all packaging materials.

LOW VOLTAGE LIGHTING SYSTEM
CLASS: **3425 - 15**
3425 - 95

© 2020, Q-Tran Inc. 155 Hill St. Milford, CT 06460. All rights reserved - 203-367-8777 - sales@q-tran.com - www.q-tran.com

QTM-DRIVE

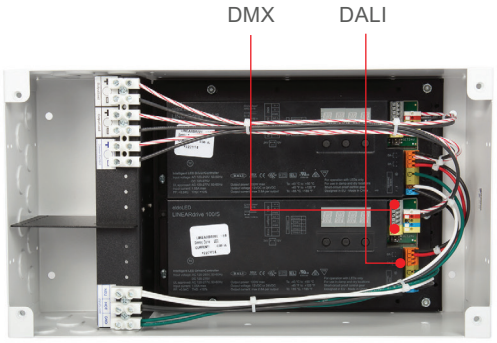

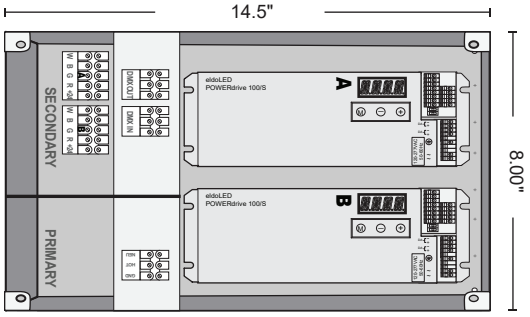

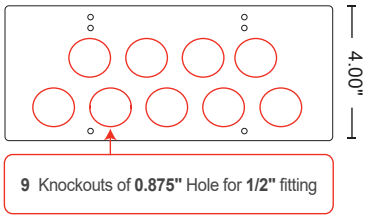

9 Knockouts of **0.875"** Hole for **1/2"** fitting

NOTE: 16 additional side knockouts

The Q-Tran QTM-Drive with available DMX or DALI control and dimming options, is an ideal solution for nearly all interior color changing lighting applications. This interior rated electronic power supply, utilizes EldoLED LINEARdrive drivers and is suitable for surface or recessed mounting, in 12VDC or 24VDC constant voltage options, and is capable of up to 200 Watts of flicker free power within a single enclosure. The QTM-Drive comes pre-wired to meet any need, with terminal blocks for all input and output connections to greatly reduce installation time.

FEATURES

- DMX or DALI controllable
- Can fit up to 2 drivers
- Surface or recess mount capable
- 4x 12/24V controllable outputs per driver
- Standby power: < 0.5W
- Flicker free operation
- Built-in surge rotection: 3kV (L to N), 4kV (L/N to GND)
- Efficiency: 90% at full load, ≥ 87% above 50W output
- Class 2 output
- Power factor: > 0.94
- THD @ full load : <10%
- DMX dimming down to 0%
- 3 year warranty
- CSA #239924

Low Voltage Lighting Systems

: CSA class 3425-15 and class 3425-95
: CSA standard C22.2 No. 250.0-08 - Luminaires
: ANSI/ UL standard 2108 - Low voltage lighting systems
: ANSI/ UL standard 8750 - Light emitting diode (LED) equipment for use in lighting products
: CSA Std C22.2 No 250.13-14 - Light emitting diode (LED) equipment for lighting pplications

DMX in/LedSync out

Use these connectors when the driver is used in a DMX network. For DMX in, connect the network cable's DMX+, DMX- and DMX shielding wire (the orange/white, orange and brown wire in a CAT5 cable) to the DMX in+, DMX in- and DMX in shield connector respectively. ForLedSync out, connect the network cable's DMX+, DMX- and DMX shielding wire to the LedSync out+, LedSync out- and LedSync shield connector respectively.

DALI

Use these connectors to connect the driver to a DALI network. Always combine a DA+ and DA- connector for either data input or data output. A separate DALI power supply is required to power the DALI bus.

WIRE LENGTH TABLE *Distances are based on a 5% Voltage drop max.

VOLTAGE DROP CHART										
VDC	**Watts (W)**	10 AWG (5.6mm²)	12 AWG (3.3mm²)	14 AWG (3.0mm²)	16 AWG (1.3mm²)	18 AWG (0.78mm²)	20 AWG (0.50mm²)	22 AWG (0.33mm²)	24 AWG (0.20mm²)	26 AWG (0.13mm²)
12	12	315'	198'	125'	78'	49'	31'	19'	12'	7'
	25	115'	72'	45'	28'	18'	11'	7'	4'	4'
	60	7'	4'	3'						
24	17	897'	564'	355'	223'	140'	88'	55'	35'	22'
	25	567'	356'	224'	141'	88'	56'	35'	22'	14'
	40	309'	194'	122'	77'	48'	30'	30'	12'	7'
	80	130'	82'	51'	32'	20'	13'	8'	5'	3'
	100	84'	53'	33'	21'	13'	8'	5'	3'	

- This product must be installed in accordance with the applicable installation code by a person familiar with the construction and operation of the product and the hazards involved.

ORDERING GUIDE

① Model		② Size		③ Sec. V		④ Control		④ Option
QTM-DRIVE	-		-		+		+	

1 Size	Max Load (Watts)	Secondary Voltage (12/24VDC)	Max Prim. Amps @ 120V	Max Prim. Amps @ 277V
60W	1X60W	12VDC	1.05 A	0.45 A
120W	2X60W	12VDC	2.10 A	0.90 A
100W	1X100W	24VDC	1.05 A	0.45 A
200W	2X100W	24VDC	2.10 A	0.90 A

2 Secondary Voltage

12VDC **24V**DC

3 Control

DMX **DALI**

4 Options

WH White (Standard) **BK** Black Powder Coat Finish

Ordering Example

QTM-DRIVE-100-24V+DMX

LOW VOLTAGE LIGHTING SYSTEM
CLASS: **3425 - 15**
3425 - 95

2020-04-08-V1

PROJECT NAME	DATE	COMPANY	TYPE	NOTE

© 2020, Q-Tran Inc. 155 Hill St. Milford, CT 06460. All rights reserved - 203-367-8777 - sales@q-tran.com - www.q-tran.com

Housing & Mounting Options

QTM Housing

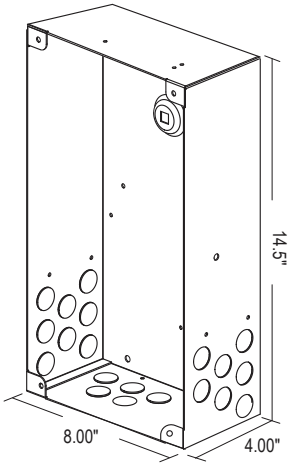

ISOMETRIC VIEW

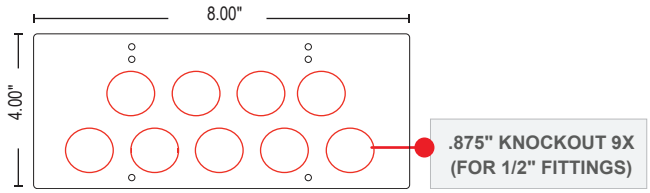

BOTTOM VIEW

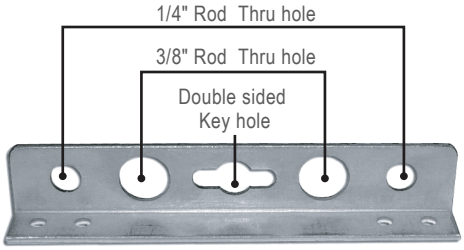

NOTE: Bracket can also be mounted (Top & Bottom) for vertical mounts.

MOUNTING OPTIONS

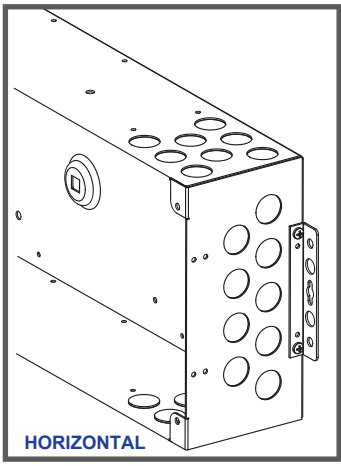

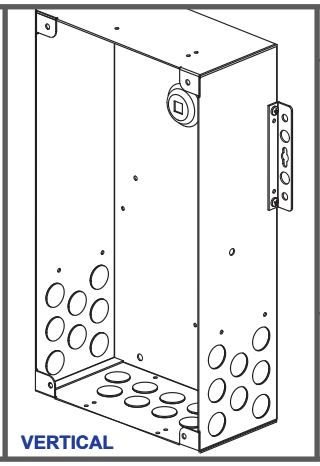

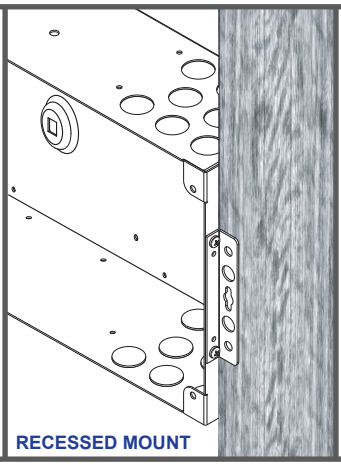

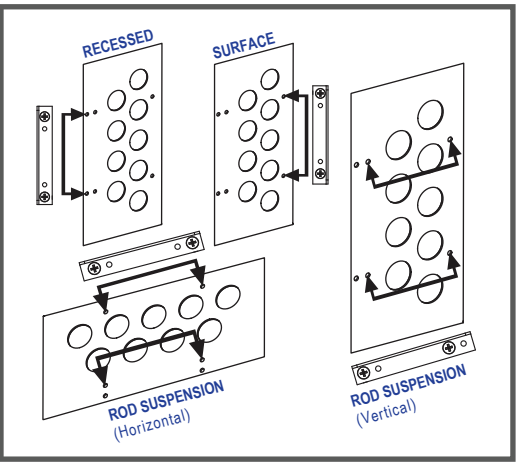

SURFACE SPACING

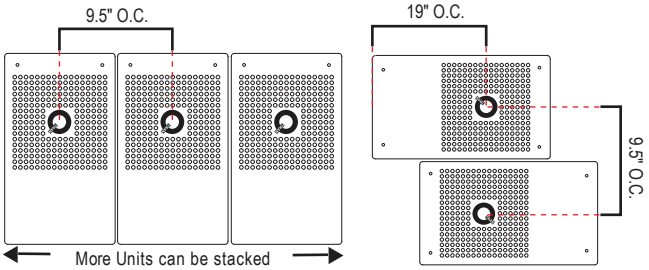

SURFACE STACKING

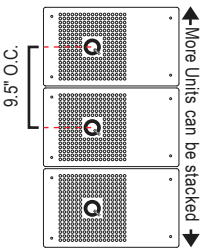

ROD SUSPENSION

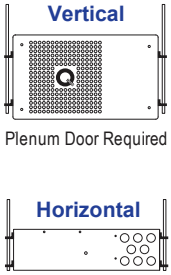

NOTE: Rods not included.

© 2020, Q-Tran Inc. 155 Hill St. Milford, CT 06460. All rights reserved - 203-367-8777 - sales@q-tran.com - www.q-tran.com

QTM - DRIVE

Connecting & Configuration Instruction

Connecting and configuring the LINEARdrive 100/S

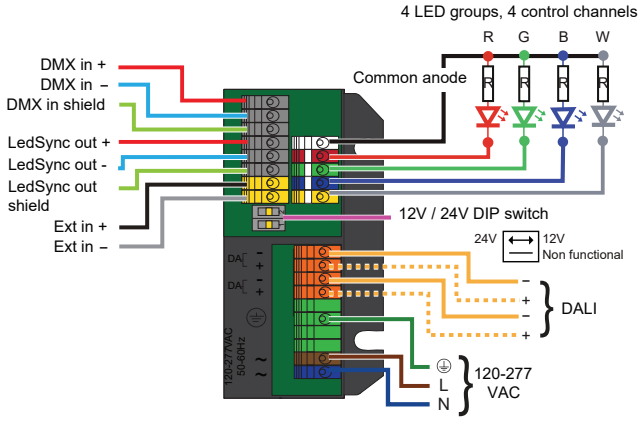

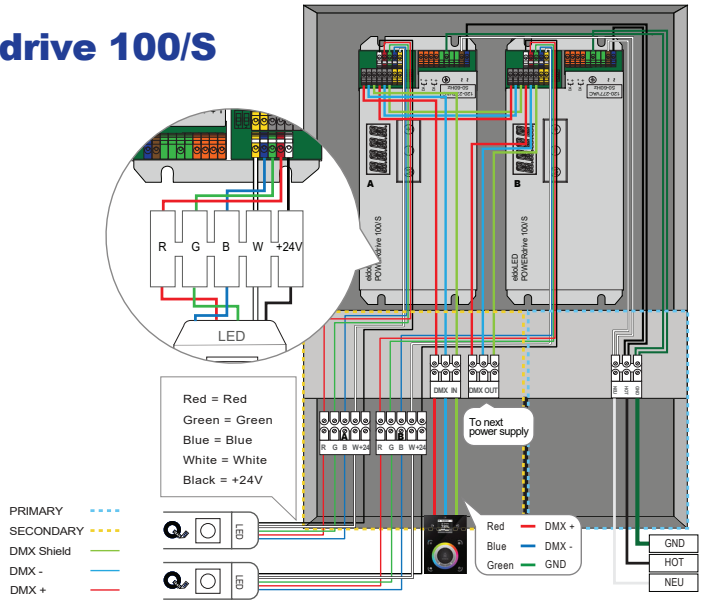

Primary Wiring

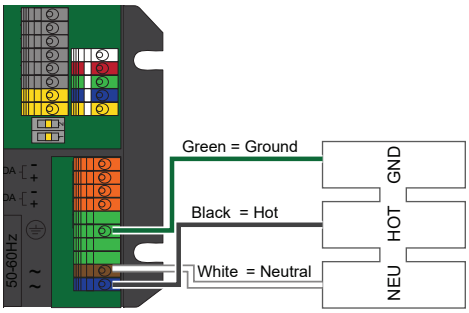

Commonly Asked Questions

1) How can I verify my installation?

- Apply AC input, verify display turns on : This confirms AC input wiring
- Run "Visual Test Run" : This verifies wiring of LEDs. Make sure LEDs turning on go in same order as the test run

2) I don't have a controller yet, how can I keep my lights on?

- Change the mode to "COLR" : This allows to manually set a specific color to be on
- Adjust the hue or WHIT to achieve the desired color : This sets that specific color

3) My LEDs aren't coming out the right color. They look like white has been added in

- Verify the network resolution "NETW RES" : Default is 8 BT
- Check your DMX programming. Stick controllers come with RGB programs by default. This will cause RGBW LEDs to show pink vs. red

Secondary Wiring

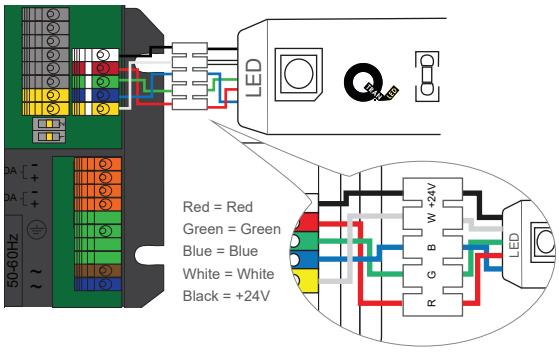

Control Wiring

DMX connections

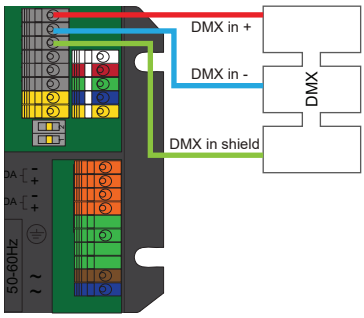

DALI connections

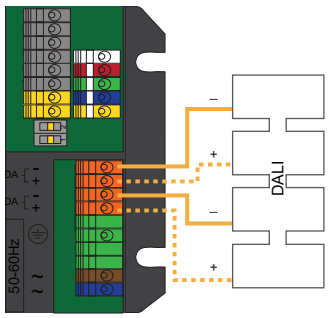

NOTE: The unit will be factory wired based on the way the unit is ordered.
Only the one applicable control will be prepared.
: DMX shielding wire must be grounded to Earth ground external to power supply.

WARNING: Risk of electrical shock. May result in serious injury or death. Disconnect power before servicing or installing.

CAUTION: The device may only be connected and installed by a qualified electrician. All applicable regulations, legislation and building codes must be observed. Incorrect installation of the device can cause irreparable damage to the device and the connected LEDs.

© 2020, Q-Tran Inc. 155 Hill St. Milford, CT 06460. All rights reserved - 203-367-8777 - sales@q-tran.com - www.q-tran.com

QTM - DRIVE

Configuration Instruction

Manual configuration

1. Select mode of operation:

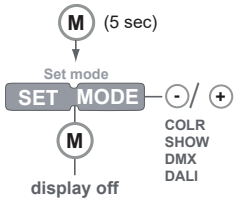

2. Set LED groups:

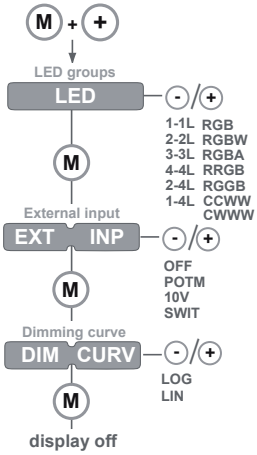

3. Standalone operation - Colour*-

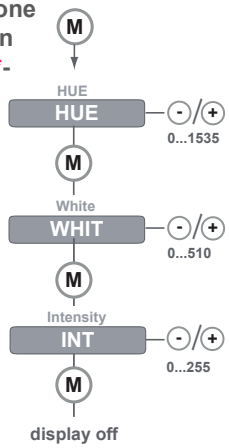

or

Standalone operation - Show-

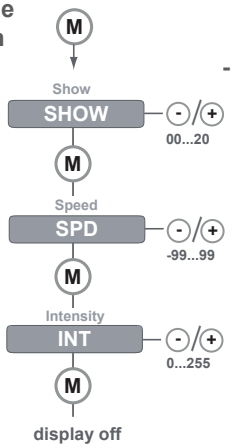

or

Standalone operation - DMX or DALI-

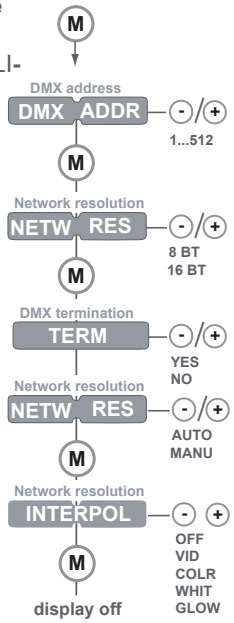

or

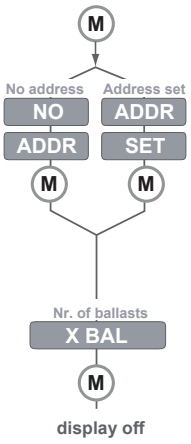

*The colour menu depends on the LED group settings you have selected in step 2.

Other features

Visual test run

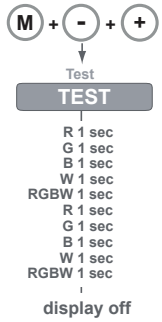

Locking the configuration:

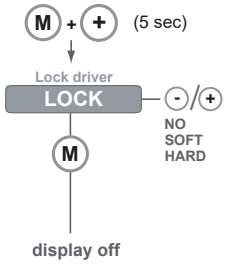

Reset to factory defaults

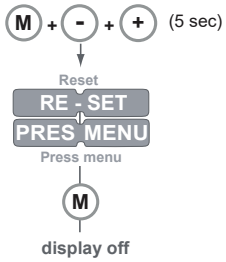

© 2020, Q-Tran Inc. 155 Hill St. Milford, CT 06460. All rights reserved - 203-367-8777 - sales@q-tran.com - www.q-tran.com

QTM - DRIVE

Wiring Installation

QTM-DRIVE

: for interior

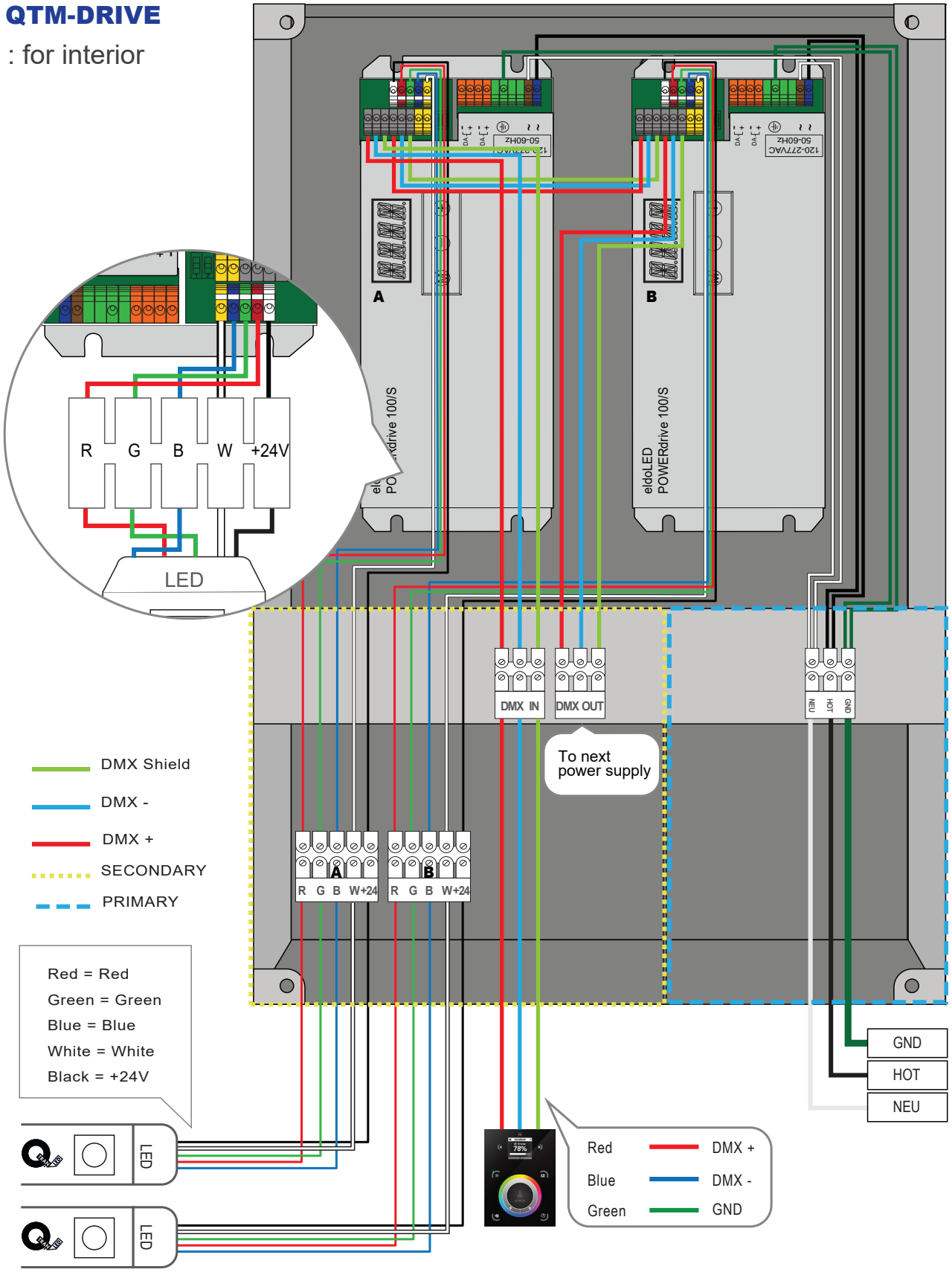

© 2020, Q-Tran Inc. 155 Hill St. Milford, CT 06460. All rights reserved - 203-367-8777 - sales@q-tran.com - www.q-tran.com

QTM - DRIVE

CSA Label

CSA Requirements

- Suitable for Indoor use
- This power supply must be installed according to the National Electric Code and local codes and ordinances and in accordance with applicable installation code by a person familiar with the construction and operation of the product and the hazards involved.
- Wear rubber shoes and work on a sturdy wooden or fiberglass ladder.
- This power supply is to be installed in a location where it is not likely to be contacted by non-electricians.
- To avoid a hazard to children, account for all parts and destroy all packaging materials.
- DMX shielding wire must be grounded to Earth ground external to power supply.

QTM-DRIVE

INPUT VOLTAGE ◯ **120V-277V**

OUTPUT VOLTAGE ◯ **12V** ◯ **24V**

	Model	Input Voltage (V)	Input Current (A)	Frequency	Nominal Output Voltage (VDC)	Nominal Output Wattage (W)	CONTROL TYPE
◯	QTM-DRIVE-60	120/277	0.67	50/60	12	60	◯ DMX
◯	QTM-DRIVE-120	120/277	1.30	50/60	12	120	◯ DALI
◯	QTM-DRIVE-100	120/277	1.05	50/60	24	100	
◯	QTM-DRIVE-200	120/277	2.10	50/60	24	200	

- Type IC recessed, inherently protected
  Type IC ENCASTRE, PROTECTION INHÉRENTE
- Wall mount only
  INSTALLATION MURALE SEULEMENT
- Suitable for damp locations
  CONVIENT AUX EMPLACEMENTS HUMIDES
- Not for use with dimmers
  NE CONVIENT PAS À DES GRADATEURS
- For supply connections use wire rated for at least 60°C.
- Class 2

This product must be installed in accordance with the applicable installation code by a person familiar with the construction and operation of the product and the hazards involved.

CE PRODUIT DOIT ÊTRE INSTALLÉ SELON LE CODE D'INSTALLATION PERTINENT, PAR UNE PERSONNE QUI CONNAÎT BIEN LE PRODUIT ET SON FONCTIONNEMENT AINSI QUE LES RISQUES INHÉRENTS.

WARNING:
RISK OF FIRE. IF INSTALLATION INVOLVES RUNNING WIRE THROUGH A BUILDING STRUCTURE, SPECIAL WIRING METHODS ARE NEEDED. CONSULT A QUALIFIED ELECTRICIAN

RISQUE D'INCENDIE. SI L'INSTALLATION IMPLIQUE UN FIL DE COURANT À TRAVERS UNE STRUCTURE DE BÂTIMENT, DES MÉTHODES DE CÂBLAGE SPÉCIALES SONT NÉCESSAIRES. CONSULTEZ UN ÉLECTRICIEN QUALIFIÉ

LOW VOLTAGE
LIGHTING SYSTEM
Q-Tran, Inc.
CLASS: **3425 - 15**
3425 - 95

Q-TRAN, INC.
MILFORD, CT U.S.A.
(203) 367-8777
WWW.Q-TRAN.COM

© 2020, Q-Tran Inc. 155 Hill St. Milford, CT 06460. All rights reserved - 203-367-8777 - sales@q-tran.com - www.q-tran.com